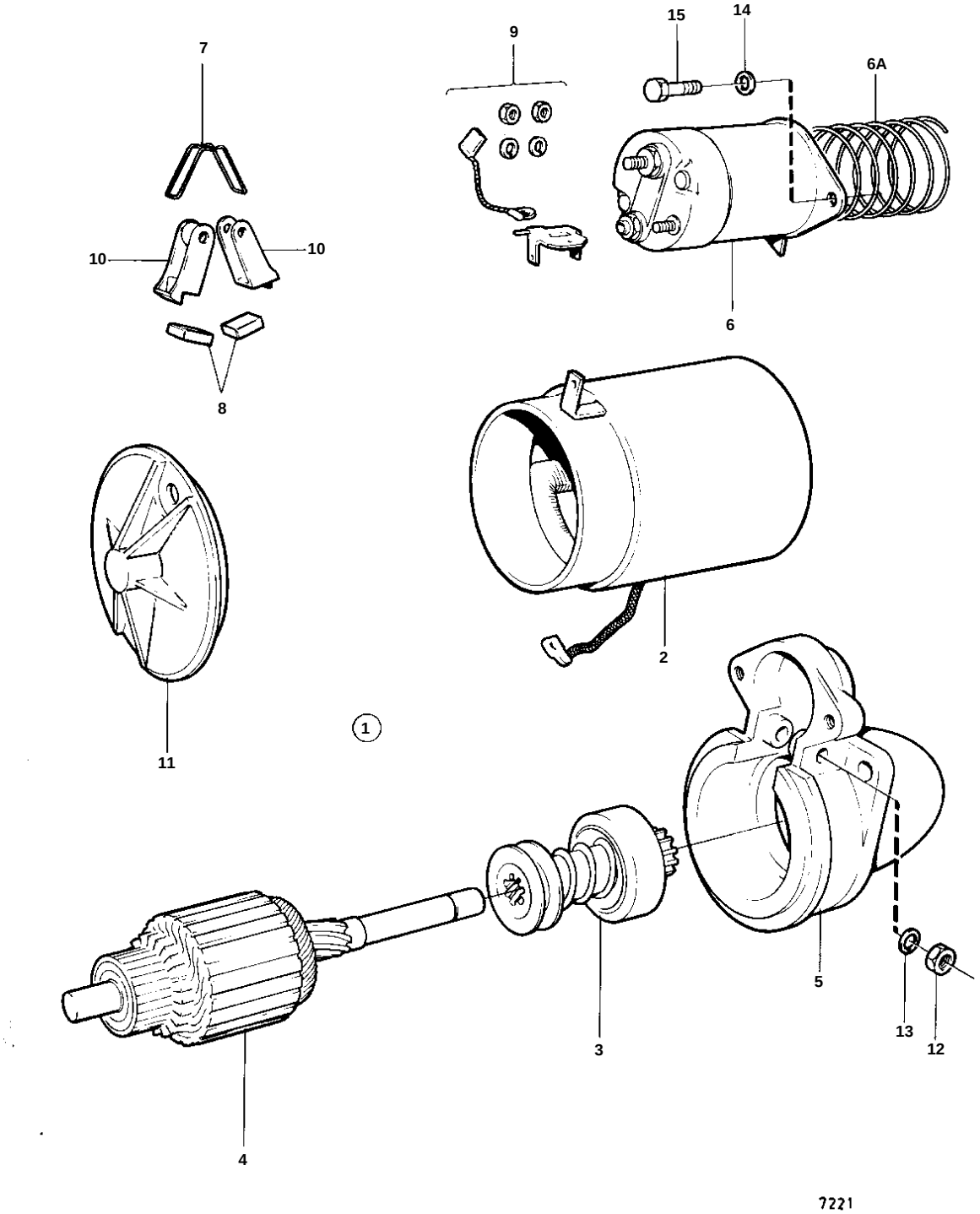
7
9
15
14
6A
10
10
6
8
2
11
1
5
13
12
3
4
7221

REF	PART NO.	QTY	DESCRIPTION
1	855326	1	Starter motor
2		1	· HOUSING
3	855361	1	· Start gear
4		1	· ROTOR
5		1	· BEARING
6	872979	1	· Solenoid
6A	855359	1	· Spring
7		2	· SPRING
8	818948	4	· Carbon brush set
9	818720	2	· Carbon holder kit
10	818718	2	· Carbon holder
11		1	· COVER